Chapter 4

Inverse Manipulator Kinematics

Overview

This chapter covers the following topics:

- Definition of inverse kinematics
- Workspace definition
- Algebraic vs. geometric
- Algebraic solution by reduction to polynomial
- The wrist-partitioned (Pieper's) method

Definition of Inverse Kinematics

The **inverse kinematics** computes the values of the joint variables that would result to a desired position or orientation of the end-effector.

Generally, it is desired for the manipulator to follow a particular path. For example, pick up an object and place it elsewhere. Therefore, a numerical desired position and orientation of the end-effector must be established.

In inverse kinematic calculations, given the numerical value of ${}^{0}_{N}T$, it is desired to find the set of joint translation/rotational displacements that will result in such numerical matrix.

Each ${}^{i-1}_{i}T$, is a function of the q_i joint displacement (θ_i for revolute and d_i for prismatic joints).

$$ {}^{0}_{e.e}T = {}^{0}_{1}T(q_1){}^{1}_{2}T(q_2) \dots {}^{n-1}_{n}T(q_n){}^{n}_{e.e}T $$

Therefore, the problem of inverse kinematics lies in comparing each element of the matrices and solve for all the joint displacements, q_i's.

Definition of Inverse Kinematics

Remarks:

- The desired position/orientation to be calculated for inverse kinematics should be with the workspace of the manipulator – which is based on the length of the links, joint kinematic layout, and joint limits.

- Redundant manipulators (more than 6-DoF) have an infinite number of solutions (configurations).

- Depending on the number of joints and the structure of the manipulator, the inverse kinematics may have no solutions, one solution, or multiple solutions.

- In the problem of inverse kinematics, normally, as set of nonlinear equations should be solved, for which, special attention should be given to the existence of the solution, number of solutions, and the method of solutions.

Manipulator Workspace

The **workspace** of a robot manipulator is defined as the set of points that can be reached by its end-effector.

- The **reachable workspace** is a region that the manipulator can reach in at least one orientation.
- The **dextrous workspace** is a region that the manipulator can reach with all the orientations.

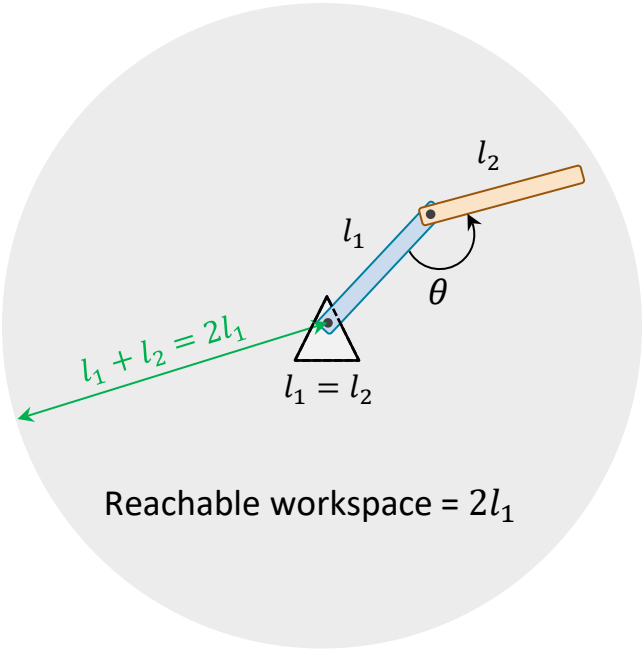

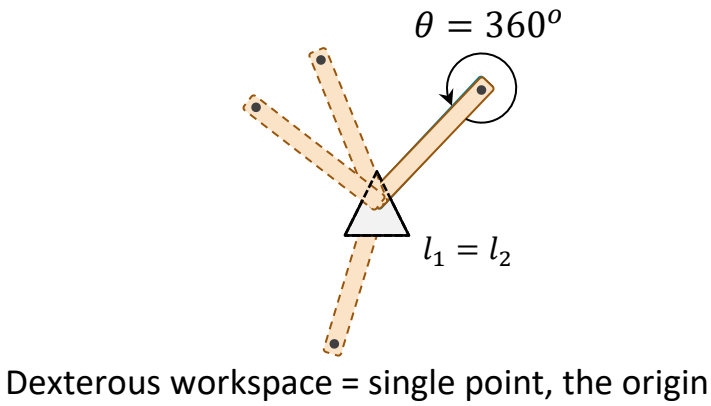

Manipulator Workspace

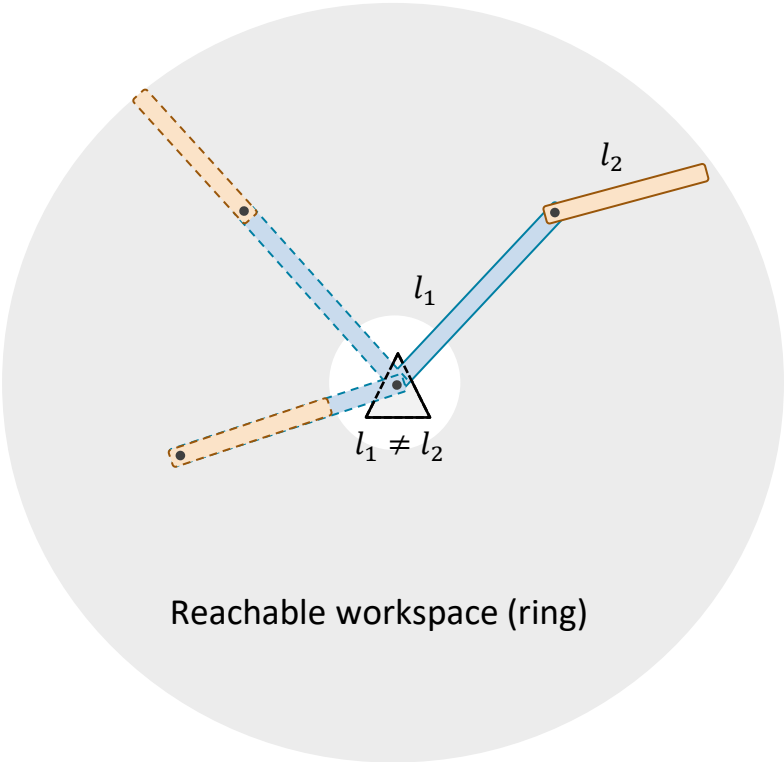

Dexterous workspace = does not exist

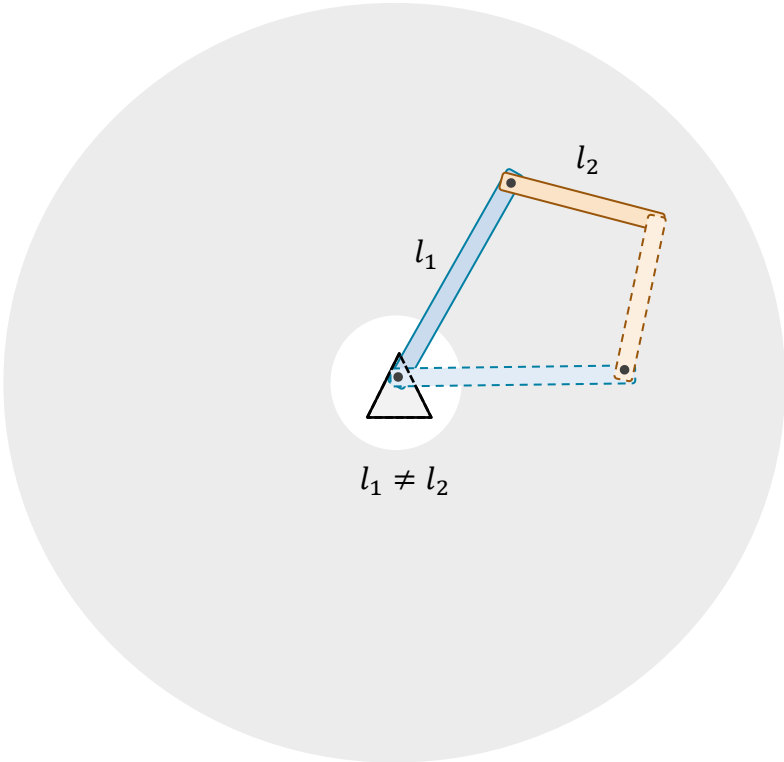

Inside the reachable workspace, there are two possible orientations of the end-effector

Manipulator Workspace

Examples of reachable workspace for 3-DoF manipulators;

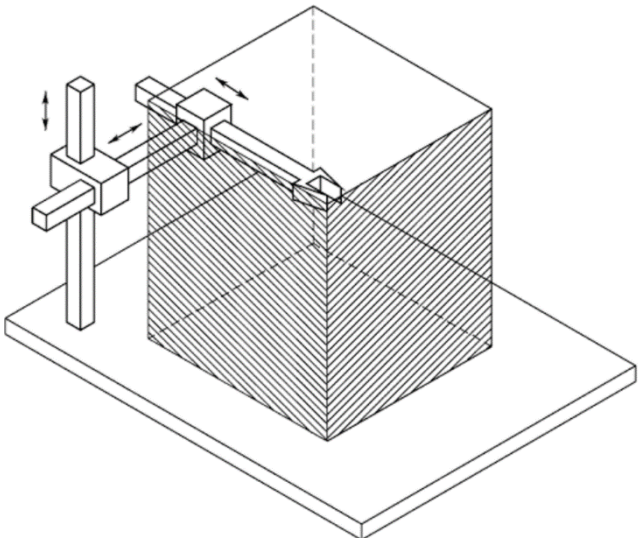

Cartesian manipulator

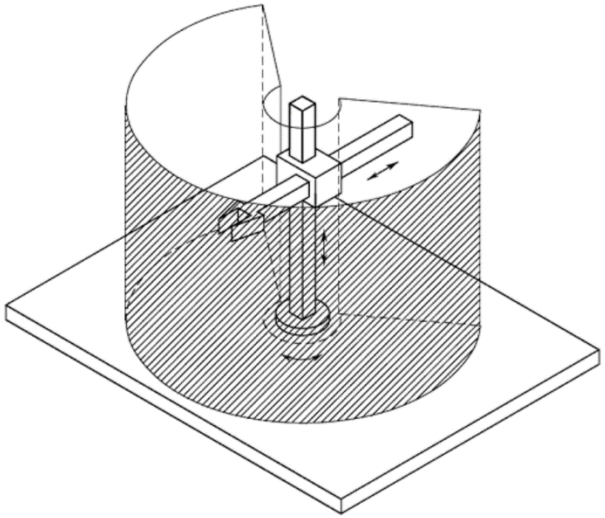

Cylindrical manipulator

Illustrations from book: Modeling and control of robot manipulators, by L. Sciavicco and B. Siciliano

Manipulator Workspace

Examples of reachable workspace for 3-DoF manipulators (cont'd);

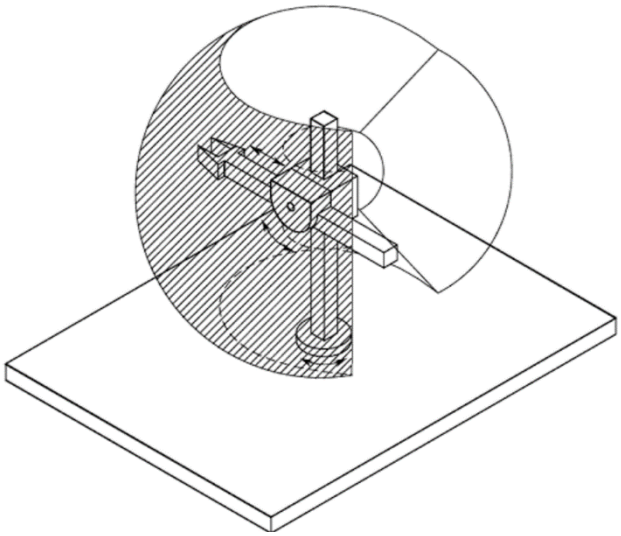

Spherical manipulator

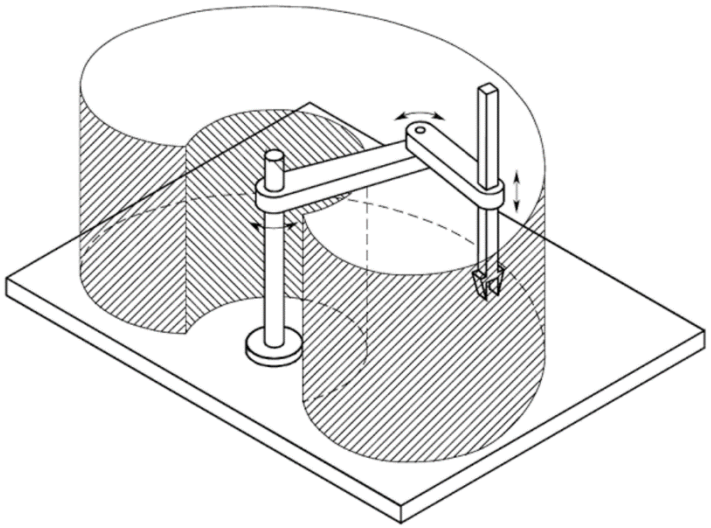

SCARA manipulator

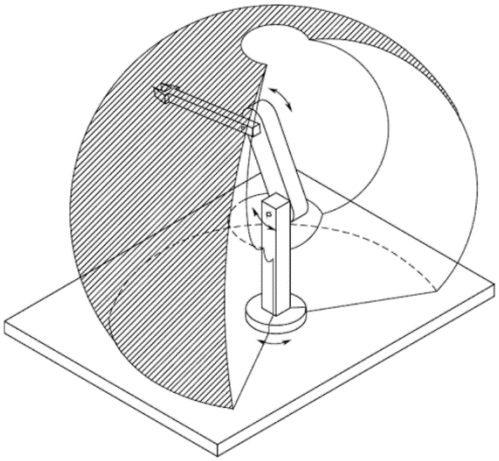

Anthropomorphic manipulator

Multiple Solutions

A good choice would be the solution that minimizes the amount that each joint required to move. In practice, other dynamic considerations like the weight of the arms should be taken into account.

- In the absence of the obstacle, the upper dashed configuration is preferred.
- In the presence of an obstacle on the path of the preferred configuration, the farther solution should be selected.

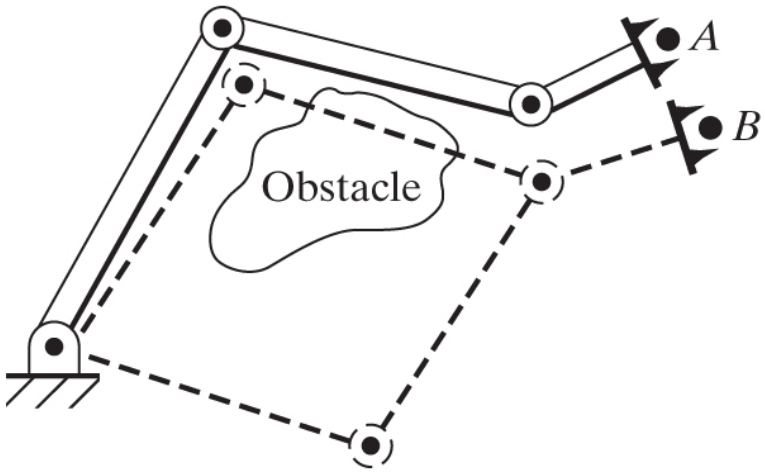

Multiple Solutions

Number of possible solutions to reach a point in reachable workspace of a PUMA 560 robot;

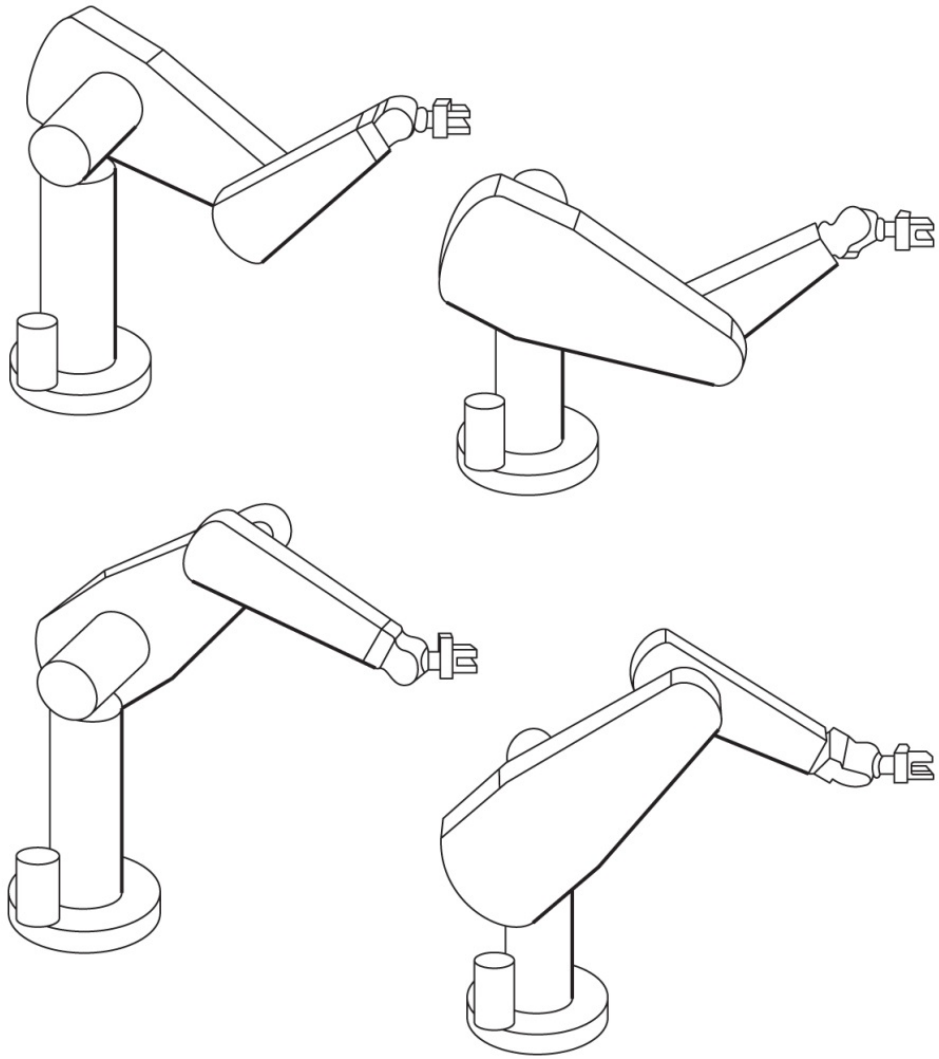

Multiple Solutions

Note: In general, the more nonzero link parameters there are, the more ways there will be to reach to certain point in reachable workspace. The more that are nonzero, the bigger is the maximum number of solutions.

a_i	Number of solutions
$a_1 = a_3 = a_5 = 0$	$\leqslant 4$
$a_3 = a_5 = 0$	$\leqslant 8$
$a_3 = 0$	$\leqslant 16$
All $a_i \neq 0$	$\leqslant 16$

Note: For a completely generally rotary-jointed manipulator with six degrees of freedom, there are up to sixteen solutions possible.

Multiple Solutions

Classes of manipulators solutions:

- **Numerical solutions**: Slow due their iterative nature. Not interested.
- **Closed-form solutions**: A solution method based on analytical expressions or the solution of a polynomial of degree 4 or less.
    - Algebraic
    - Geometric

Note: A sufficient condition that a manipulator with six revolute joints have a closed-form solution is that three neighboring joint axes intersect at a point. (Pieper's method, discussed later in this chapter).

Almost every manipulator with 6-DoF built today has three intersecting axes.

Algebraic Solution

Consider the three-link planar manipulator studied in Chapter 3 with the following link parameters.

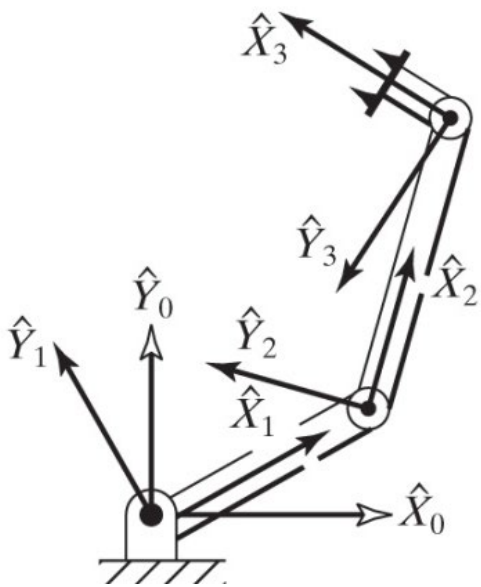

i	α_{i-1}	a_{i-1}	d_i	θ_i
1	0	0	0	θ_1
2	0	L_1	0	θ_2
3	0	L_2	0	θ_3

Algebraic Solution – cont'd

The goal point is a specification of the wrist frame relative to the base frame, that is

$$ {}^{B}_{W}T = {}^{0}_{3}T = \begin{bmatrix} c_{123} & -s_{123} & 0.0 & l_1c_1 + l_2c_{12} \\ s_{123} & c_{123} & 0.0 & l_1s_1 + l_2s_{12} \\ 0.0 & 0.0 & 1.0 & 0.0 \\ 0 & 0 & 0 & 1 \end{bmatrix} $$

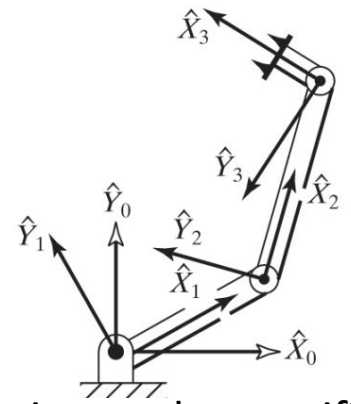

Given the planar nature of motion for this manipulator, the goal point can be specified using x, y, and ϕ where ϕ is the orientation of link 3 in the plane (relative to the $+\hat{X}$ axis).

$$ {}^{B}_{W}T = \begin{bmatrix} c_\phi & -s_\phi & 0.0 & x \\ s_\phi & c_\phi & 0.0 & y \\ 0.0 & 0.0 & 1.0 & 0.0 \\ 0 & 0 & 0 & 1 \end{bmatrix} $$

Algebraic Solution – cont'd

Four nonlinear equations must be solved:

$$c_\phi = c_{123},$$

$$s_\phi = s_{123},$$

$$x = l_1 c_1 + l_2 c_{12}, \text{ and}$$

$$y = l_1 s_1 + l_2 s_{12}.$$

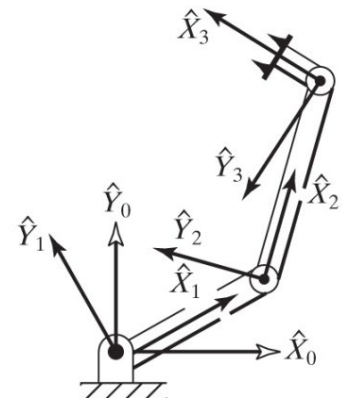

Squaring and adding the last two equations gives:

$$x^2 + y^2 = l_1^2 + l_2^2 + 2 l_1 l_2 c_2$$

where we made use of

$$c_{12} = c_1 c_2 - s_1 s_2$$

$$s_{12} = c_1 s_2 + s_1 c_2$$

Solving for c_2

$$c_2 = \frac{x^2 + y^2 - l_1^2 - l_2^2}{2 l_1 l_2}$$

Algebraic Solution – cont'd

Assuming the goal is in the workspace, for s_2 we obtain

$$s_2 = \pm\sqrt{1 - c_2^2}$$

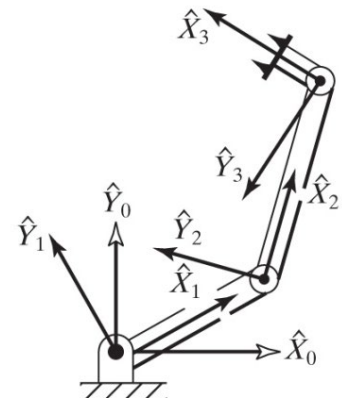

Hence, θ_2 can be found.

$$\theta_2 = \mathrm{Atan2}(s_2, c_2)$$

Having found θ_2, θ_1 can be found,

$$x = k_1 c_1 - k_2 s_1$$

$$y = k_1 s_1 + k_2 c_1$$

where,

$$k_1 = l_1 + l_2 c_2,$$
$$k_2 = l_2 s_2.$$

Performing a change of variable $r = +\sqrt{k_1^2 + k_2^2}$ and $\gamma = \mathrm{Atan2}(k_2, k_1)$,

$$k_1 = r\cos\gamma,$$
$$k_2 = r\sin\gamma.$$

Algebraic Solution – cont'd

$$\frac{x}{r} = \cos\gamma\cos\theta_1 - \sin\gamma\sin\theta_1$$

$$\frac{y}{r} = \cos\gamma\sin\theta_1 + \sin\gamma\cos\theta_1$$

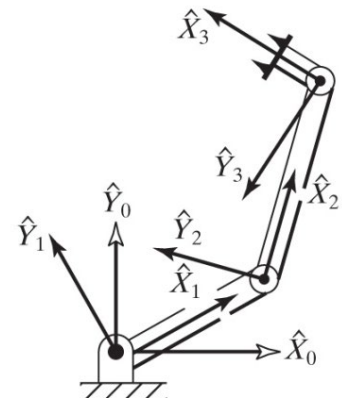

So,

$$\cos(\gamma + \theta_1) = \frac{x}{r}$$

$$\sin(\gamma + \theta_1) = \frac{y}{r}$$

Using the two-argument arctangent,

$$\gamma + \theta_1 = \mathrm{Atan2}\left(\frac{y}{r}, \frac{x}{r}\right) = \mathrm{Atan2}(y, x)$$

And so,

$$\theta_1 = \mathrm{Atan2}(y, x) - \mathrm{Atan2}(k_2, k_1)$$

Solving for the sum of θ_1 through θ_3,

$$\theta_1 + \theta_2 + \theta_3 = \mathrm{Atan2}(s_\phi, c_\phi) = \phi$$

Geometric Solution

Applying the law of cosine

$$x^2 + y^2 = l_1^2 + l_2^2 - 2l_1 l_2 \cos(180 + \theta_2)$$

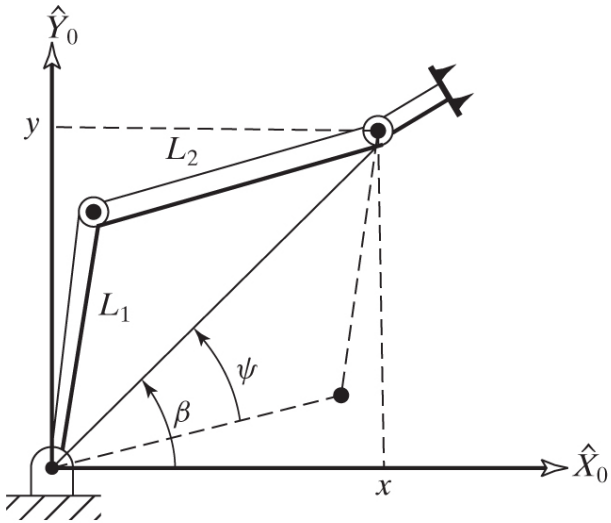

Since, $\cos(180^o + \theta_2) = -\cos(\theta_2)$,

$$c_2 = \frac{x^2 + y^2 - l_1^2 - l_2^2}{2l_1 l_2}$$

In order for the triangle to exist, $\sqrt{x^2 + y^2} \leq l_1 + l_2$ - a condition that can be checked in a computational algorithm to check the existence of the solution.

$$\beta = \text{Atan2}(y, x)$$

$$\cos\psi = \frac{x^2 + y^2 + l_1^2 - l_2^2}{2l_1\sqrt{x^2 + y^2}}$$

So, $\theta_1 = \begin{cases} \beta + \psi & , \theta_2 < 0 \\ \beta - \psi & , \theta_2 > 0 \end{cases}$

For the orientation of the link,

$$\theta_1 + \theta_2 + \theta_3 = \phi$$

4.5 Algebraic Solution by Reduction to Polynomial

Transcendental equations are difficult to solve. Following substitutions are often used.

$$u = \tan\frac{\theta}{2} \qquad \cos\theta = \frac{1-u^2}{1+u^2} \qquad \sin\theta = \frac{2u}{1+u^2}$$

Note: In mathematics, a transcendental function is an analytic function that does not satisfy a polynomial equation, in contrast to an algebraic function.

Example: Convert the transcendental equation $a\cos\theta + b\sin\theta = c$ into a polynomial in the tangent of the half angle and solve for θ.

$$a(1-u^2) + 2bu = c(1+u^2)$$

$$(a+c)u^2 - 2bu + (c-a) = 0$$

$$u = \frac{b \pm \sqrt{b^2+a^2-c^2}}{a+b}$$

$$\theta = 2\tan^{-1}\left(\frac{b \pm \sqrt{b^2+a^2-c^2}}{a+c}\right)$$

4.6 Pieper's Solution when Three Axes Intersect

Consider Puma serial robot. The last three axes intersect, the origin of link frames {4}, {5}, and {6}, i.e. Wrist Bend, Swivel, and Roll, are all located at this point of intersection. Knowing x, y, and z and three orientations , i.e. α, θ, and γ of frame 6 with respect to frame 0, the transformation matrix between the two frames from Chapter 2 is

$$ {}^{0}T_{6} = \begin{bmatrix} & {}^{0}R_{6} & & {}^{0}P_{6ORG} \\ 0 & 0 & 0 & 1 \end{bmatrix} $$

Where

$$ {}^{0}R_{6} = \begin{bmatrix} r_{11} & r_{12} & r_{13} \\ r_{21} & r_{22} & r_{23} \\ r_{31} & r_{32} & r_{33} \end{bmatrix} $$

Is the rotation matrix and

$$ {}^{0}P_{6ORG} = \begin{bmatrix} x \\ y \\ z \end{bmatrix} $$

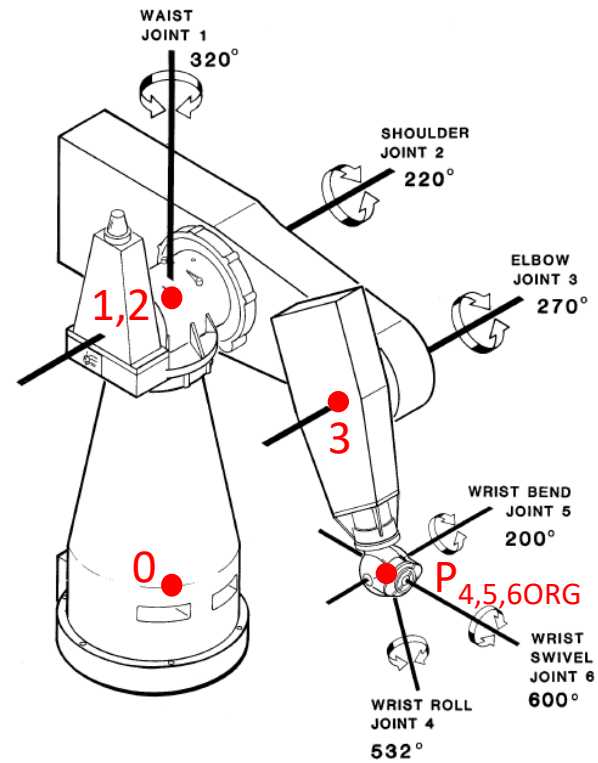

We know ${}^{0}P_{6ORG}$ and ${}^{0}P_{4ORG}$ are the same points in space

4.6 Pieper's Solution when Three Axes Intersect

From Chapter 3 we have

$$ {}^{0}T_6 = {}^{0}T_1 {}^{1}T_2 {}^{2}T_3 {}^{3}T_4 {}^{4}T_5 {}^{5}T_6 = \begin{bmatrix} & {}^{0}R_6 & & {}^{0}P_{6ORG} \\ 0 & 0 & 0 & 1 \end{bmatrix} $$

Also

$$ {}^{0}T_6 = {}^{0}T_4 {}^{4}T_5 {}^{5}T_6 = \begin{bmatrix} & {}^{0}R_4 & & {}^{0}P_{4ORG} \\ 0 & 0 & 0 & 1 \end{bmatrix} {}^{4}T_5 {}^{5}T_6 = \begin{bmatrix} & {}^{0}R_6 & & {}^{0}P_{6ORG} \\ 0 & 0 & 0 & 1 \end{bmatrix} $$

We know

$$ {}^{0}P_{4ORG} = {}^{0}P_{6ORG} $$

Therefore, for only matching the positions, we do not need to calculate the whole ${}^{0}T_6$

4.6 Pieper's Solution when Three Axes Intersect

$$^{0}P_{4ORG} = {}^{0}T_1 {}^{1}T_2 {}^{2}T_3 {}^{3}P_{4ORG}$$

From Chapter 3, for any two adjacent joints we have

$$^{i-1}T_i = \begin{bmatrix} c\theta_i & -s\theta_i & 0 & a_{i-1} \\ s\theta_i c\alpha_{i-1} & c\theta_i c\alpha_{i-1} & -s\alpha_{i-1} & -d_i s\alpha_{i-1} \\ s\theta_i s\alpha_3 & c\theta_i s\alpha_{i-1} & c\alpha_{i-1} & d_i c\alpha_{i-1} \\ 0 & 0 & 0 & 1 \end{bmatrix}$$

Therefore

$$^{3}T_4 = \begin{bmatrix} c\theta_4 & -s\theta_4 & 0 & a_3 \\ s\theta_4 c\alpha_3 & c\theta_4 c\alpha_3 & -s\alpha_3 & -d_3 s\alpha_3 \\ s\theta_4 s\alpha_3 & c\theta_4 s\alpha_3 & c\alpha_3 & d_3 c\alpha_3 \\ 0 & 0 & 0 & 1 \end{bmatrix}$$

and

$$^{3}P_{4ORG} = \begin{bmatrix} a_3 \\ -d_4 s\alpha_3 \\ d_4 c\alpha_3 \\ 1 \end{bmatrix}$$

4.6 Pieper's Solution when Three Axes Intersect

The following relationship will give us 3 nonlinear equations which can be used to find θ_1, θ_2, and θ_3

$$ {}^{0}P_{4ORG} = {}^{0}T_1 {}^{1}T_2 {}^{2}T_3 \begin{bmatrix} a_3 \\ -d_4 s\alpha_3 \\ d_4 c\alpha_3 \\ 1 \end{bmatrix} = \begin{bmatrix} x \\ y \\ z \\ 1 \end{bmatrix} $$

A proper factorization can help us to define a process to calculate θ_1, θ_2, and θ_3. Lets define f_1, f_2, and f_3 as follows

$$ \begin{bmatrix} f_1 \\ f_2 \\ f_3 \\ 1 \end{bmatrix} = {}^{2}T_3 \begin{bmatrix} a_3 \\ -d_4 s\alpha_3 \\ d_4 c\alpha_3 \\ 1 \end{bmatrix} $$

$$ \begin{aligned} f_1 &= a_3 c_3 + d_4 s\alpha_3 s_3 + a_2 \\ f_2 &= a_3 c\alpha_2 s_3 - d_4 s\alpha_3 c\alpha_2 c_3 - d_4 s\alpha_2 c\alpha_3 - d_3 s\alpha_2 \\ f_3 &= a_3 s\alpha_2 s_3 - d_4 s\alpha_3 s\alpha_2 c_3 + d_4 c\alpha_2 c\alpha_3 + d_3 c\alpha_2 \end{aligned} $$

f_1, f_2, and f_3 are only functions of θ_3

4.6 Pieper's Solution when Three Axes Intersect – cont'd

Using ${}^{1}_{2}T$ and ${}^{0}_{1}T$,

$$ {}^{0}P_{4ORG} = \begin{bmatrix} c_1 g_1 - s_1 g_2 \\ s_1 g_1 + c_1 g_2 \\ g_3 \\ 1 \end{bmatrix} = \begin{bmatrix} x \\ y \\ z \\ 1 \end{bmatrix} $$

where

$$ g_1 = c_2 f_1 - s_2 f_2 + a_1 $$
$$ g_2 = s_2 c\alpha_1 f_1 + c_2 c\alpha_1 f_2 - s\alpha_1 f_3 - d_2 s\alpha_1 $$
$$ g_3 = s_2 s\alpha_1 f_1 + c_2 s\alpha_1 f_2 + c\alpha_1 f_3 + d_2 c\alpha_1 $$

g_1, g_2, and g_3 are only functions of θ_2 and θ_3.

Now, writing an expression for the squared of ${}^{0}P_{4ORG}$

$$ \begin{aligned} r &= x^2 + y^2 + z^2 \\ &= (c_1 g_1 - s_1 g_2)^2 + (s_1 g_1 + c_1 g_2)^2 + g_3{}^2 \\ &= g_1{}^2 + g_2{}^2 + g_3{}^2 \\ &= f_1^2 + f_2{}^2 + f_3{}^2 + a_1{}^2 + d_2{}^2 + 2d_2 f_3 + 2a_1(c_2 f_1 - s_2 f_2) \end{aligned} $$

4.6 Pieper's Solution when Three Axes Intersect – cont'd

Let,

$$k_1 = f_1$$
$$k_2 = -f_2$$
$$k_3 = f_1^2 + f_2^2 + f_3^2 + a_1^2 + d_2^2 + 2d_2 f_3$$
$$k_4 = f_3 c\alpha_1 + d_2 c\alpha_1$$

We can rewrite equations for *r* and *z* as

$$r = (k_1 c_2 + k_2 s_2)2a_1 + k_3$$
$$z = (k_1 s_2 + k_2 c_2)s\alpha_1 + k_4$$

These two equations are useful as they eliminate the dependence on θ_1. Dependence on θ_2 has taken a simple form.

Consider three distinguish cases for the solution of θ_3:

1- If $a_1 = 0$, then $r = k_3$ where r is known. The right side (k_3) is a function of θ_3 only. Using transcendental equations, the quadratic equation in $\tan\frac{\theta_3}{2}$ can be solved for θ_3.

2- If $s\alpha_1 = 0$, then $z = k_4$, where z is known. Using transcendental equations, the quadratic equation can be solved for θ_3.

4.6 Pieper's Solution when Three Axes Intersect – cont'd

3- Otherwise,

$$\frac{r-k_3}{2a_1} = k_1 c_2 + k_2 s_2$$

$$\frac{z-k_4}{s\alpha_1} = k_1 s_2 + k_2 c_2$$

$$\left(\frac{r-k_3}{2a_1}\right)^2 + \left(\frac{z-k_4}{s\alpha_1}\right)^2 = k_1{}^2 + k_2{}^2$$

This removes the dependency on θ_2.

Using transcendental equations, the above equation becomes of degree 4, that can be solved for θ_3.

4.6 Pieper's Solution when Three Axes Intersect – cont'd

Next is to solve for θ_4, θ_5, and θ_6.

→ The rotation portion of ${}^0_6R$ can be used.

$$ {}^3_6R = {}^0_3R^{-1}\,{}^0_6R = \begin{bmatrix} r_{11} & r_{12} & r_{13} \\ r_{21} & r_{22} & r_{23} \\ r_{31} & r_{32} & r_{33} \end{bmatrix} $$

$$ {}^3_6R = {}^3_4R\,{}^4_5R\,{}^5_6R = \begin{bmatrix} c_4 & -s_4 & 0 \\ s_4 & c_4 & 0 \\ 0 & 0 & 1 \end{bmatrix} \begin{bmatrix} c_5 & -s_5 & 0 \\ 0 & 0 & -1 \\ s_5 & c_5 & 0 \end{bmatrix} \begin{bmatrix} c_6 & -s_6 & 0 \\ 0 & 0 & 1 \\ -s_6 & -c_6 & 0 \end{bmatrix} $$

$$ = \begin{bmatrix} c_4c_5c_6 - s_4s_6 & -c_4c_5s_6 - s_4c_6 & -c_4s_5 \\ s_4c_5c_6 + c_4s_6 & -s_4c_5s_6 + c_4c_6 & -s_4s_5 \\ s_5c_6 & -s_5s_6 & c_5 \end{bmatrix} $$

→ For many manipulators, these last three angles can be solved for by using the $Z - Y - Z$ Euler angle solution (from chapter 2), applied to ${}^3_6R$

4.6 Pieper's Solution when Three Axes Intersect – cont'd

REMINDER: 2.8 Orientation - Euler Angles Z – Y – Z

Forward problem: With the Euler angle representation, the rotation matrices are post-multiplied.

$$ {}^{A}_{B}R_{ZY'Z''}(\alpha,\beta,\gamma) = \begin{bmatrix} c\alpha c\beta c\gamma - s\alpha s\gamma & -c\alpha c\beta s\gamma - s\alpha c\gamma & c\alpha s\beta \\ s\alpha c\beta c\gamma + c\alpha s\gamma & -s\alpha c\beta s\gamma + c\alpha c\gamma & s\alpha s\beta \\ -s\beta c\gamma & s\beta s\gamma & c\beta \end{bmatrix} = \begin{bmatrix} r_{11} & r_{12} & r_{13} \\ r_{21} & r_{22} & r_{23} \\ r_{31} & r_{32} & r_{33} \end{bmatrix} $$

You consider α, β, and γ as θ_4, θ_5, and θ_6

Inverse problem:

$$ \theta_2 = \mathrm{Atan2}\left(\sqrt{r_{31}^2 + r_{32}^2}, r_{33}\right) $$

$$ \theta_1 = \mathrm{Atan2}(r_{23}/s\beta, r_{13}/s\beta\ ) $$

$$ \theta_3 = \mathrm{Atan2}(r_{32}/s\beta, -r_{31}/s\beta\ ) $$

4.11 Computational Considerations

In many path-controlled schemes (Chapter 7), it is necessary to calculate the inverse kinematics of a manipulator at 30 Hz or faster. For computational efficiency, one may consider the followings:

- Using a lookup-table for $\mathrm{atan2}$ routine.
- Structure of the computation of multiple solutions in parallel (rather than pursuing them one after another serially).
- Using fixed- over floating-point representation of the quantities involved in calculation (it is possible since the variables do not have large dynamic range, and the ranges are fairly well-known).
- Factorization of equations to reduce the number of multiplications and additions – this comes at the cost of creating local variables (good trade-off)
- Avoid the computation of redundant kinematics, e.g., calculate only two columns of rotation, then compute the third column using cross product.
- For transcendental functions, they can be computed from a series expansion.

Let The Learning Continue